HEADROOM REQUIRED

OPENING HEIGHT	VERTICAL HEADROOM	HORIZONTAL HEADROOM
THRU 7'-4"	15 ½"	17"
OVER 7'-4" THRU 8'-8"	16"	17 ½"
OVER 8'-8" THRU 10'-0"	17"	18 ½"

NOTES:

1. OPERATION TYPE MAY BE PUSH-UP OR RIGHT HAND INTERNAL ELECTRIC.
2. FOR CRITICAL FITS DUE TO REDUCED AVAILABLE HEADROOM OR SIDEROOM CLEARANCES, CONSULT FACTORY.
3. CLEARANCES SHOWN ARE MAXIMUMS. LESSER CLEARANCES MAY BE POSSIBLE.
4. UNLESS OTHERWISE NOTED, LOCKING SHALL BE BY SINGLE MINI SLIDE LATCH BOLTED TO CURTAIN AND SUITABLE FOR DOUBLE PADLOCKS AND SINGLE CYLINDER LOCK BY OTHERS.
5. LATCH COVER IS YELLOW ZINC (STAINLESS STEEL OPTIONAL) AND SLIDE IS MAGNETIC STAINLESS.
6. SERIES 650I IS AN INSULATED SERIES 650.
7. CURTAIN FINISH SHALL BE SILICONE POLYESTER PRE-PAINT OVER GALVANIZED GRADE 80 STEEL.
8. GUIDES, BRACKETS, BOTTOM BAR ANGLE AND HEAD STOPS ARE ZINC COATED.
9. MAXIMUM OPENING SIZE: 10'-0" X 10'-0".

MINI LATCH

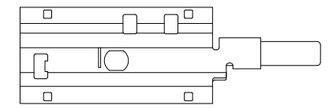

OUTSIDE OF DOOR VIEW

MINI LATCH CYLINDER LOCK BACK PLATE (ONLY USED WITH CYLINDER LOCK)

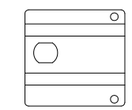

INSIDE OF DOOR VIEW

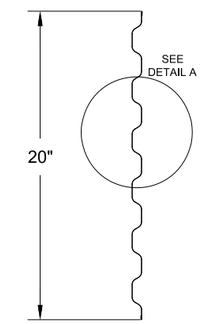

26 GA CURTAIN PANEL DETAIL

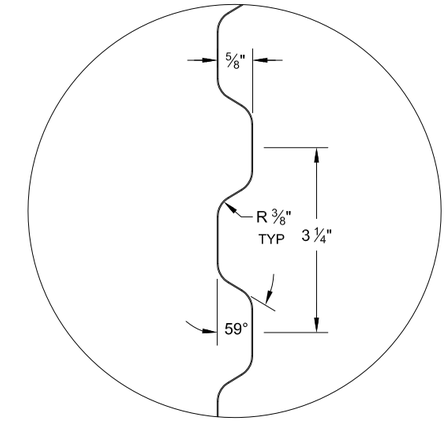

DETAIL A

MINI STOP CLIP

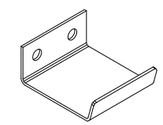

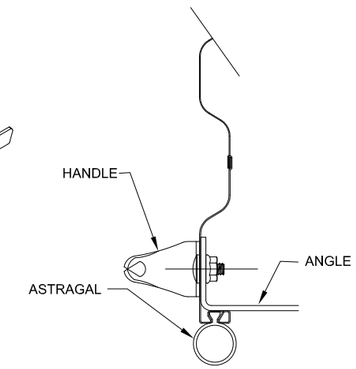

BOTTOM BAR ASSEMBLY

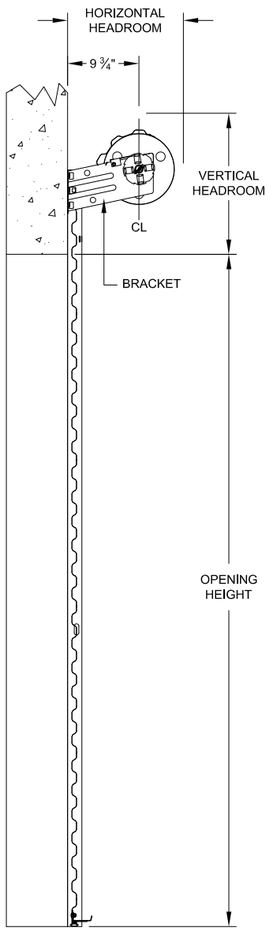

END VIEW

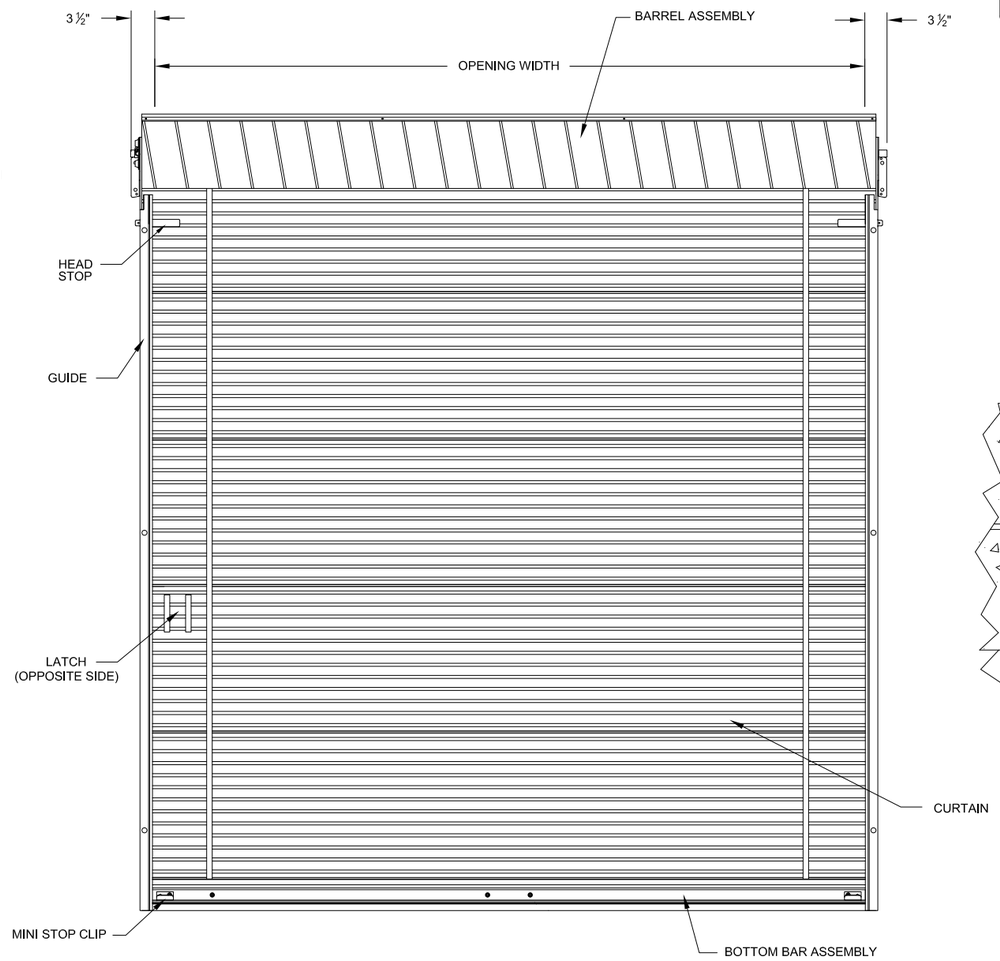

INSIDE ELEVATION

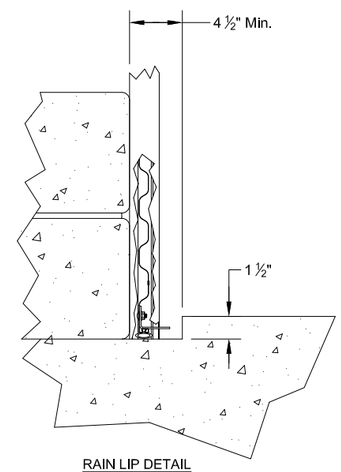

RAIN LIP DETAIL

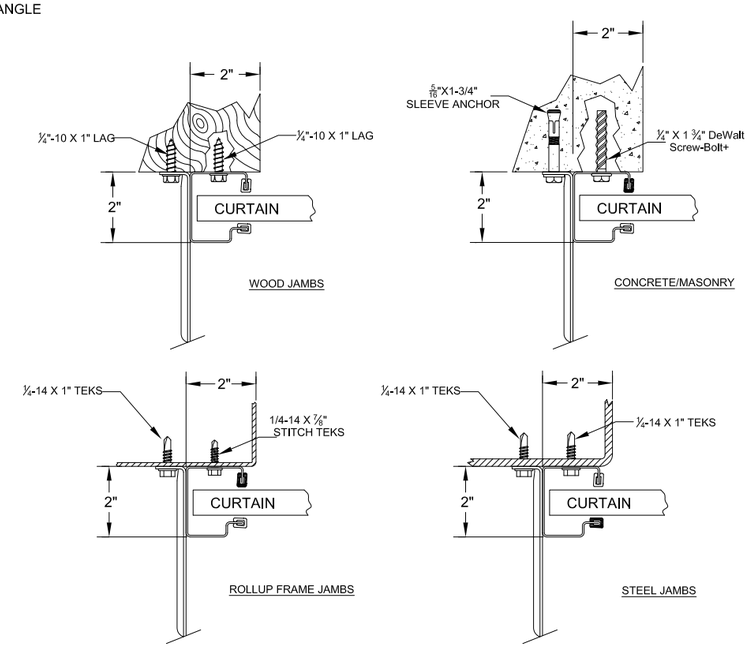

18 GA GUIDE & BRACKET MOUNTING DETAIL

C.S. 8-28-2017

FACTORY ORDER NUMBER	DOOR SERIES		QTY	OPENING SIZE		JAMB TYPE			OUTSIDE CURTAIN COLOR	OPERATION			OPERATION HAND	WEATHERSTRIP			ADDED OPTIONS
	650	650I		WIDTH	HEIGHT	STEEL	CONC./ MAS	WOOD		PUSH UP	REDUCED CHAIN	ELECTRIC		TOP	HEADER	SIDE	

MINI DOOR SERIES: 650/650I

CUSTOMER NUMBER:		DATE:	
CUSTOMER NAME:		CONTACT:	
PROJECT NAME:			
PROJECT LOCATION:			
PLANT:		SALESPERSON:	
DRAWN BY:	DATE:		
DRAWING NUMBER:	SHT:	OF:	

JANUS INTERNATIONAL GROUP, LLC.
135 JANUS INTERNATIONAL BLVD.
TEMPLE, GA 30179-4435
770-562-2850 FAX: 770-562-2264